JHA1000SR 90° DATASHEET

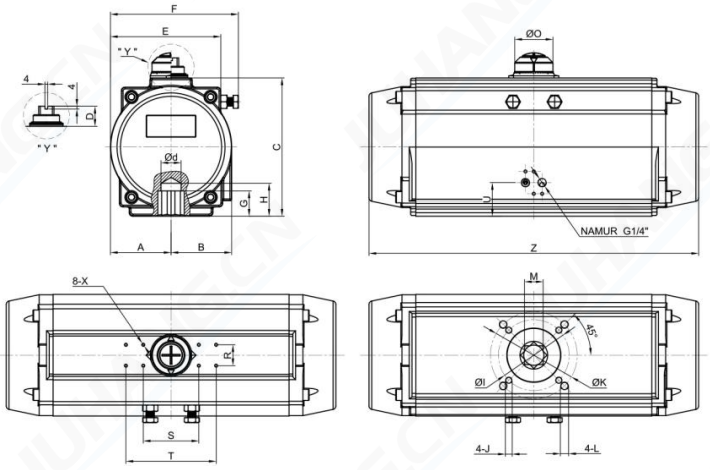

Reference Parameters			
Cylinder size	190		mm
Weight	31		kg
Air volume	Open	5.9	L
	Close	-	
Cycle speed*①	Open	<3	s
	Close	<2	
Pressure rang	2 up to 8		bar(g)
Media	Clean,dry and non-corrosive compressed air		
Temperature	High	-15 up to 150	℃
	Standard	-20 up to 80	
	Low	-40 up to 80	
Flange	F14		
Stroke	90±5		°

> According to EN 15714-3 & ISO 5211

>*①. Test conditions: clean air with a pressure of 6 bar,the diameter of the pipe is10 mm,and the temperature is room temperature.

Dimensions in mm

Model	A	B	C	D	E	F	G	H	J	ϕK	L	M	R	S	T	O	U	Φd	Z	X	Air connection
JHA1000SR	104	104	231	30	190	224	41	53	M10*12	140	M16*25	36	30	130	312	80	55	38	544	M5*8	G1/4"

OUTPUT TORQUE (Unit:N.m)

Model	Air Supply Pressure in bar(g)																				
	Spring	2.5		3		4		4.5		5		5.5		6		7		8		Spring output	
	Type	0°	90°	0°	90°	0°	90°	0°	90°	0°	90°	0°	90°	0°	90°	0°	90°	0°	90°	Start	End
JHA1000SR	K6	293	159	400	265	614	479	721	586	827	692									375	240
	K8			320	140	534	354	641	461	747	567	854	674	960	781	1174	994			500	320
	K10					454	229	561	336	667	442	774	549	880	656	1094	869	1307	1082	625	400
	K12									587	317	694	424	800	531	1014	744	1227	957	750	480

OUTPUT TORQUE (Unit:lbf.in)

Model	Air Supply Pressure in psi																				
	Spring	36		44		58		65		73		80		87		102		116		Spring output	
	Type	0°	90°	0°	90°	0°	90°	0°	90°	0°	90°	0°	90°	0°	90°	0°	90°	0°	90°	Start	End
JHA1000SR	K6	2593	1407	3540	2345	5434	4239	6381	5187	7320	6125									3319	2124
	K8			2832	1239	4726	3133	5673	4080	6611	5018	7558	5965	8497	6912	10391	8798			4425	2832
	K10					4018	2027	4965	2974	5903	3912	6850	4859	7789	5806	9683	7691	11568	9576	5532	3540
	K12									5195	2806	6142	3753	7081	4700	8975	6585	10860	8470	6638	4248

Notes:

> 1 bar(g) = 14.5038 psi ; 1 N.m = 8.8507 lbf.in

> For further information regarding options , materials , certifications and additional execution please contact JUHANG's sales office.

> Flange and bi-square drive shall comply with ISO 5211 standard.

> Solenoid valve mounting interface according to VDI/VDE 3845(NAMUR)